ROK DVS JUNIOR

OWNER'S MANUAL

TABLE OF CONTENTS

1.1. INTRODUCTION

Thank you for your purchasing of a Vortex engine. This manual contains information on how to help you with getting the best results from your new engine. Furthermore, it will explain you how to operate your Vortex engine safely and in a proper manner.

Vortex update this manual constantly. All the information in this manual is based on the latest experience and product information available at the time of writing.
Vortex reserve the right to make any kind of changes to this manual at anytime without notice and without incurring in any obligation.

This manual shall be considered part of the Vortex engine and should remain with the engine itself if resold.

1.2. SYMBOLS

Personal injury

Mechanical Danger

Caution

Pay attention to the symbols of this manual. They alert you of dangerous situations for you or for your engine.

1.3. SAFETY INFORMATION

- Do not start the engine indoor as garages, trailers, etc. Start the engine in a well-ventilated area only. Exhaust emissions are hazardous to your health.
- Always wear gloves and proper clothing when working on your engine.
- Use caution when handling fuel. Gasoline is flammable and explosive. When working with fuel, do not smoke or use it near fire or flames. Avoid any skin contact and inhaling fuel vapors.
- Never touch moving parts when the engine is running.
- During operation both engine and muffler, become very hot. Do not touch them and do not place anything on them after operation.
- Do not touch the spark plug or cable. It may provoke electrical shocks.
- Understand the operation of all controls and learn how to stop the engine quickly in case of emergency.
- Do not use the engine without clutch cover and chain protection.

1.4. TECHNICAL SPECIFICATIONS

Cylinder Displacement (max)	125cc
Cylinder Bore JNR (max)	54.28 mm
Cylinder Bore SNR (max)	54.32 mm
Piston Stroke	54.00 mm
Admission system	Crankcase reed
Cooling System	Liquid
Carburetor	Ibea ROK DVS
Ignition System	PVL
Ignition Type	Digital
Ignition Timing Snr	2.5 mm
Ignition Timing Jnr	3.0 mm
Spark Plug Gap	0.8 mm
Fuel Mixture	5%
Engine Weight	13 kg

-All sizes and measurements in this manual are expressed in metric.
-Always use original Vortex parts and proper tools when working on your engine.
-Proper fuel mix is necessary for optimum engine life and performance.

1.5. SPECIAL TECHNICAL SPECIFICATIONS FOR HOMOLOGATED ENGINE

Vortex Rok DVS is produced in two versions: “Senior” and “Junior” lower powered version. However, refer to your country homologation file for eventual specific rules and/or sizes.

1.6. PACKAGING

Your engine will be packed in a sealed box with the Vortex logo printed on and a sticker with model and serial number attached. It will be a second box complete with accessories as carburettor, muffler, fuel pump, air box, etc.

2. ENGINE ASSEMBLING

In order to perform this job, you will need the following tools:

Compressed air	
Allen T-wrench	**4 - 5 - 6 mm**
Fixed wrench	**8 - 10 mm**
Flat plier	
Hollowed T-wrench	**10 mm**

1

Compressed air

Unpack the engine and remove any packaging material on it.

2

6mm Allen T-Wrench

Lay the engine on its side and attach the engine mount to the engine base with four 8 mm Allen screws.

3

6mm Allen T-Wrench

Remove the oil filler cap (white arrow) and fill with ***30 cc of engine oil viscosity 40W90***
Replace the oil cap and check that the indicator lamp (yellow arrow) is completely covered with oil. If it is not, add more engine oil, until complete coverage of the indicator lamp.

4 **10 mm Fixed Wrench** Attach the braided earth wire end between engine and silent block and tighten 10mm locknut.	
5 **10mm Fixed Wrench** Assemble the second silent block on the engine. Insert braided wire between the small and large washers.	
6 Place the coil support plate of the ignition coil in the two silent blocks, and secure black coil earth in same manner as above.	

7 Connect a kill switch to steering wheel (not supplied) to female bullet connector (pink wire)	
8 The coil incorporates RPM control. (Green coil Snr 16,000) (Blue coil Jnr 14,000)	
9 **Flat Plier** Remove the plastic cap from the head of the cylinder. **Spark Plug Wrench** Manually tighten the spark plug at the head of the cylinder. Lock it with the key to loosening it then retighten 2/3 consecutive times; so as to allow the gasket to enter into seat properly. Now you can tighten the spark plug properly.	

10

Insert the cable coil in the spark plug and tighten it.
For safety, we recommend you to secure the cable coil to the spark plug cap with a plastic strap.
Place the spark plug cap on the spark plug and press down the cap fully.

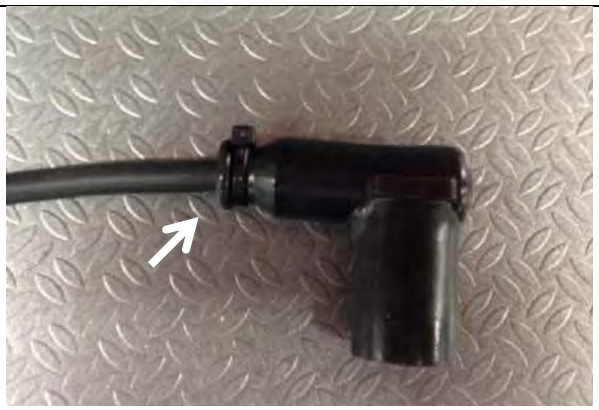

11

Flat Plier
5 mm Allen T-Wrench

a. Remove the plastic cap from the intake manifold.
b. Remove the carburettor from the box.
c. Making sure that the gasket is in the correct position insert the carburettor on the studs of the intake manifold.
d. Secure the carburettor tightening with the appropriate column nuts supplied.

12

Plug the throttle cable inside the carburettor throttle control making sure to leave the pawl of the cable in the special seat on the carburettor and pass the throttle cable in the adjuster on the carburettor

13

Place intake cylinders inside the intake silencer.

14

Pre-drill drain hole no larger than 8mm in the centreline underneath location as pictured.

Place the DVS air filter connector to the carburettor inside the intake muffler. You will find a groove in the sleeve, necessary to fix properly the rubber boot to the plastic silencer.

15

Check that the rubber boot is fixed properly to the intake silencer. Incorrect installation may cause a loss of the intake silencer itself.

16

Flat Plier

Fasten the intake silencer previously assembled to the carburettor by using the specific metal clamp supplied.
Secure intake silencer from rotating with zip ties linked to the chassis or by adapting a bracket. (not supplied)

17 Your Vortex engine is now ready to be installed on the chassis.	

3. STARTING AND BRAKE-IN

Only a proper break-in will insure the best performance out of your engine in the future and guarantee its long and trouble-free life.

Break-in is required when an engine is new or has undergone a major service of the engine's main parts (piston, cylinder, connecting rod, etc.).

1 Prepare fuel. Vortex engine works with commercial gasoline, leaded or unleaded, as well as racing fuel, with minimum 95 ROM.
Mix oil and gasoline at 5% (i.e. 50cc of oil every 1.000 cc. of fuel) 20:1

2 Use a high-quality synthetic oil specifically made for kart engines. Check any requirements of your ASN regarding the use of specific brand/type.

3 Shake the can thoroughly to mix the fuel and the oil properly. Then fill the gas tank in your kart. A mistake in measurements could result in engine damage.

4 Before making the first start you must fill the carburettor with fuel.
To do this you need to remove the spark plug and spin the rear tires for a few seconds.
Once the fuel line will be completely full, you can reinstall the spark plug and proceed to first start.

5
To start the engine on the stand wrap a tough belt around the rear tire, press down decompression button on head, ask helper to apply small throttle opening and pull belt quickly.
Adjust idle stop screw to absolute minimum idle speed if at all.
To stop the engine, press the brake pedal.

6 For proper operation of the cooling system it is necessary to bleed the circuit by each air bubble. To adequately perform this operation proceed as follows: Fill the radiator with water and raising the kart from the radiator side make the excess air come out. Now top up with more water. Spin the rear axle for a few seconds to release air	

from the external water pump. If necessary top up the radiator again. Do not close the radiator cap.

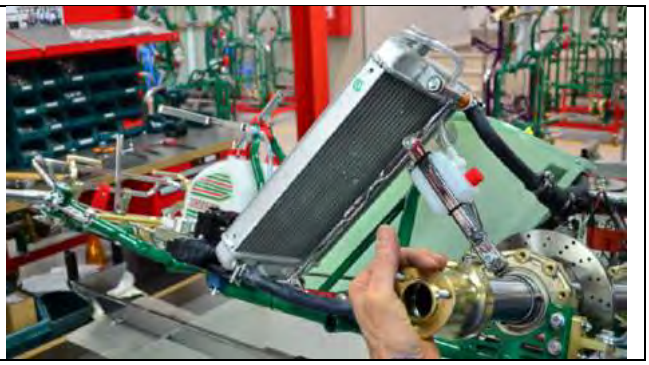

7

4 mm Allen T-Wrench

Now bleed the cylinder head circuit. Loosen the screw on the head (yellow arrow) and keep it open until it comes out only water. Now tighten the screw and refill the radiator with water.
At this point you can close the radiator cap.

8 Warm up the engine accelerating driving up the motor speed and then let it down again alternately. Bring the water temperature around 48 -50 ° C before stopping the engine. **Do not accelerate** fully but only partially.
Check that the cooling system warms up evenly, in case it warms unevenly proceed again with the bleeding of the cooling system as described in paragraphs 6-7.

9 Once the engine is warmed up and the cooling system works properly, proceed to the track.

10 Run the engine by alternating a few seconds on and off the throttle at ¾ of the opening.
Do not hold the throttle at a constant speed.
Continue this way for 5/6 laps.

11 Check everything on the kart is tighten properly. Be careful, engine and muffler are hot.

12 Return to the track and slowly increase the RPM and duration of the acceleration phase for 10/15min more. Intermittently open the throttle fully and then release it.

13 After 10/15 minutes of brake-in, your engine is ready for competition. During the break-in, nuts and bolts tend to loosen. Once the engine is cold, check the torque of the exhaust, head, etc.

4.SERVICING YOUR ENGINE

Good maintenance is essential for safe, economical and trouble-free operation. Here you will find a maintenance schedule for your engine. Routine inspection procedures are very simple by using basic tools. Some service tasks that are more difficult or needs special tools must be performed by Vortex technicians or qualified mechanics.
Timing schedule periods are only indicative.

4.1. Maintenance Schedule Guide and Adjustments

Carburettor	Cleaning	After every race/heat
Throttle Cable	Check	Every race
Spark Plug	Check Change	Every Race After 30 hours
Exhaust	Internal cleaning	Every 10 hours
Piston	Change	Up to 30 hours
Chain	Change	After 10 hours
Cylinder	Honing	Up to 30 hours
Connecting Rod	Change	After 60 hours
Bottom End bearings	Check/Change	After 30/60 hours

4.2. Torque Chart

Cylinder Head Ø 8 mm Nut	18 Nm
Exhaust Manifold Ø 6 mm Bolts	12 Nm (Use threadlocker)
Crankcase Ø 6 mm Bolts	12 Nm
Ignition Nut	28 Nm
Ignition Ø 5 mm Bolts	8 Nm
Nylon crankshaft stuffer	8 Nm (Use threadlocker)

4.3. Sizes and Measures

Tolerance Cylinder/Piston JNR	0.12 mm
Tolerance Cylinder/Piston SNR	0.13 mm
Timing Snr DVS	2.5 mm
Timing Jnr DVS	3.0 mm
Piston Sizes	
W10140/DVS	54.00
W10143/DVS	54.03
W10146/DVS	54.06
W10149/DVS	54.09
W10152/DVS	54.12
W10155/DVS	54.15

4.4. Chain

	Lube the chain every race by spraying chain lube on the chain while manually rotating the rear wheel. To replace the chain, loosen the engine and slide it back to release the old chain from the sprocket. Reverse the procedure after installing a new chain.

4.5. Throttle Cable

	Lubricate the throttle cable each time the engine is run. Also check, and adjust the cable as needed, to assure the correct throttle and that the throttle returns properly and opens full size. If the cable frays, it must be replaced.

4.6. Carburettor

Cleaning: Fuel and oil may contain impurities, and/or residues. 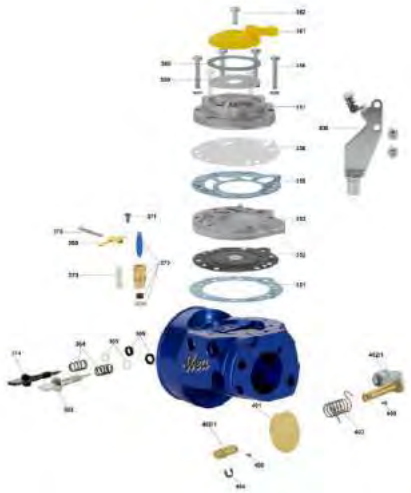	**1.** Take the intake silencer off the carburettor by unscrewing the clamp. **2.** Disconnect the throttle cable from the carburettor. **3.** Take the carburettor off the engine and open the float chamber by unscrewing the five screws. Clean the parts, openings and passages with compressed air. Check the float chamber gaskets and eventually change them if damaged. **4.** Close the float chamber by screwing the five screws and replace the carburettor in the engine. **5.** Clean the inside of the intake silencer. **6.** Attach the intake silencer assembly to the adaptor. **7.** Tighten it with the specific clamp. Wrong assembly will cause the loss of the intake silencer.

4.7. Spark Plug

Cleaning: Oils produce carbon deposits or residues that make necessary the spark plug to be checked and cleaned, at least every 5 hours.	Unplug the spark plug and clean it by using a brass metal brush.
Setting Plug Gap:	Use a specific spark plug gap gauge to set up correct gap. Correct gap: 0.8 mm.

4.8. Exhaust

Cleaning: Oils produce carbon deposits or residues that make necessary the exhaust to be checked and cleaned, at least every 10 hours.	**1.** Remove the muffler from the engine by removing the springs in the cradle between exhaust and manifold. **2.** Unscrew the 3 bolts in the exhaust end cap. **3.** Warm up the pipe with a heat source and remove any carbon deposits by means of a metal brush.

4.9. Pinion

Some ASNs allow the use of Z11, Z12 pinions. Standard pinion supplied by Vortex is Z12.	**1.** By the special tool, remove the snap ring of the pinion. **2.** Remove the pinion by pulling the pinion towards the outside. **3.** Place the new pinion on the crankshaft and secure it by using the appropriate snap ring.

4.10. Cylinder Head

Oils produce carbon deposits or residues that make necessary the cylinder head to be checked and cleaned, at least every race. **Be aware, cylinder head volume may be changed after the race, carbon deposits may cause variations on the cylinder head volume.** 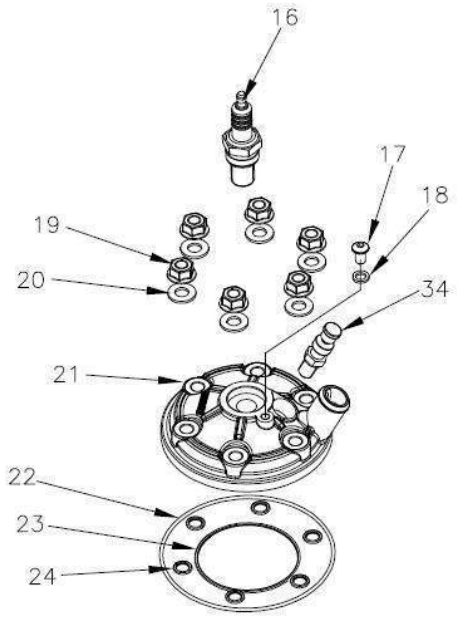 	**In order to perform this job, we highly recommend taking the engine off the chassis. However, you may do the job even with the engine mounted.** **1.** Unscrew the spark plug (16). **2.** Unscrew the 6 nuts on top of the head (19) and the 6 washers (20). **3.** Remove the head by pulling it up carefully. **4.** Clean the combustion chamber using a rag moistened with gasoline or solvent. **ASSEMBLING** **5.** Check O-RINGS on top of cylinder. **6.** Re-place cylinder head carefully in the 6 studbolts and check that o-rings (22 – 23 – 24) are properly fitted in place. **7.** Insert brass washers (20) and manually screw nuts (19). **8.** Tighten cylinder head nuts with the proper tool and torque, respecting the tightening torque.

4.11. Cylinder

Every 30 hours cylinder must be honed.

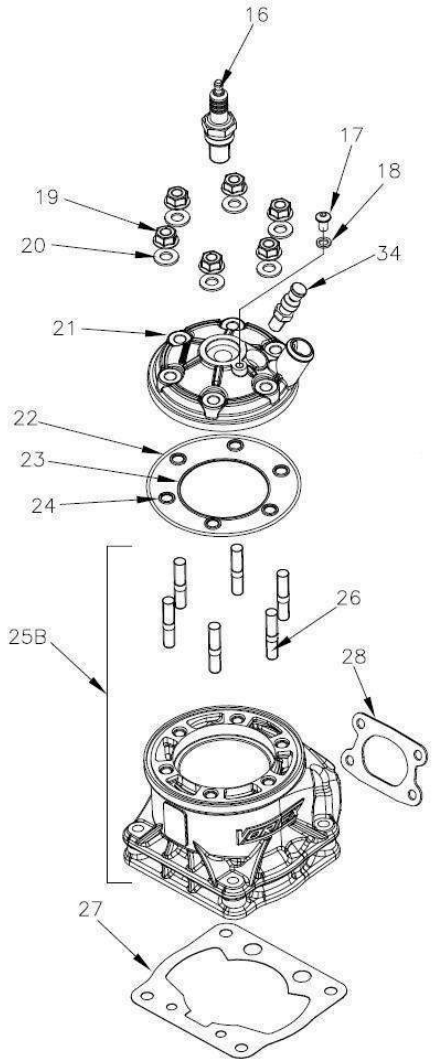

In order to perform this job, we highly recommend taking the engine off the chassis. However, you may do the job even with the engine mounted.

1. Take away the muffler from the engine by removing the springs fixing it to the exhaust manifold.
2. Unscrew and remove the spark plug (16).
3. Unscrew and remove the 6 nuts on top of head (19) and the 6 washers (20).
4. Remove the head by pulling it up carefully.
5. Unscrew the 4 nuts on top of head.
6. Remove the cylinder with one hand by pulling it up. To avoid contact with the crankcase, use the other hand to hold the connecting rod.

Whenever you disassemble the cylinder, we recommend replacing the cylinder gasket (27).

ASSEMBLING
Check the tolerance between piston and cylinder. Wrong tolerance may cause serious damage.
6. Place a new gasket (27) into the four studbolts.
7. Insert cylinder into the four studs carefully and tighten the nuts paying attention to the tightening torque.
8. Check the rubber o-ring (22 – 23 - 24) and eventually re-place them with new ones.
9. Re-place the cylinder head carefully in the six studbolts (26).
10. Insert brass washers (20) and manually screw the nuts (19).
11. Tighten cylinder head with the proper tool and torque.
12. Place a new ex gasket (28) loctite 4 bolts, torque - 12Nm.
Important: After honing the cylinder and eventually changing the piston, the engine must go through another break-in period. **See "Starting and Break-in".**

4.12. Piston

Oils produce carbon deposits or residues that make necessary the spark plug to be checked and cleaned, at least every race.
Be aware, cylinder head volume may be changed after the race, carbon deposits may cause variations on the cylinder head volume.

Every 30 hours piston must be replaced.

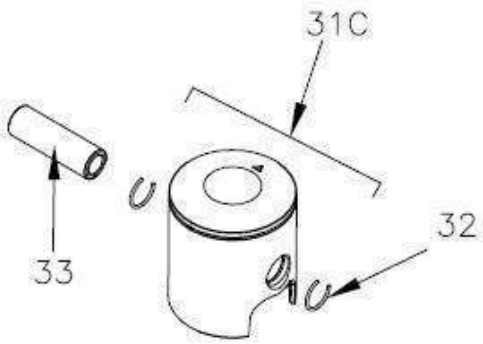

In order to perform this job, we highly recommend taking the engine off the chassis. However, you may do the job even with the engine mounted.

1. Take away the muffler from the engine by removing the 2 springs fixing it to the exhaust manifold.
2. Unscrew and remove the spark plug (16).
3. Unscrew and remove the 6 nuts on top of head (19) and the 6 washers (20).
4. Remove the head by pulling it up carefully.
5. Unscrew the 4 nuts on top of head.
6. Remove the cylinder with one hand by pulling it up. To avoid contact with the crankcase, use the other hand to hold the connecting rod.

Whenever you disassemble the cylinder, we recommend replacing the cylinder gasket (27).

6. Remove the 2 piston pin circlips (32) by squeezing the ends together with the needle-nose.
7. Hook the connecting rod each side with two fingers.
8. Push the piston pin (33) off the piston by using a proper tool.
9. In order to avoid damages pull the piston up with one hand while holding the connecting rod with the other.
10. Take the roller bearing off the connecting rod.

ASSEMBLING
Check the tolerance between piston and cylinder. Wrong tolerance may cause serious damage.
11. Lubricate and replace a new roller bearing, if needed, on the connecting rod.
12. Insert a new piston in the connecting rod. The arrow marked on top of it, must face the exhaust port.
13. Insert the piston pin into the piston.
14. Insert piston pin circlips on each side of the piston.
Be aware, wrong assembly of piston pin circlips may cause important damage.
15. Fit the piston ring and check both ends close properly against the brass pin inserted in the piston.
16. Place a new gasket (27) into the 4 studbolts.
17. Insert the cylinder into the 4 studbolts carefully and

	tighten the nuts paying attention to the tightening torque. **18.** Check the rubber O.R. (22-23-24) and eventually replace them with new ones. **19.** Re-place the cylinder head carefully in the 6 studbolts (26). **20.** Insert brass washers (19) and nuts manually (20). **21.** Tighten cylinder head with proper tool and torque. **Important:** After changing the piston, the engine must go through another break-in period. **See "Starting and Break-in".**

4.13. Connecting Rod

Every 60 hours the con-rod and roller cage must be changed.
Due to special tools required, this operation must be performed by the Vortex technicians or qualified mechanics only.

4.14. Bottom End bearings

Bearings must be checked at 30hrs, and eventually replaced, after 60 hours of use. Bearings must be assembled or reassembled, with name and type facing each others..
Due to special tools required, this operation must be performed by the Vortex technicians or qualified mechanics only.


VORTEX
ENGINES


patrizicorse.com


Rok
DVS
JUNIOR
by VORTEX

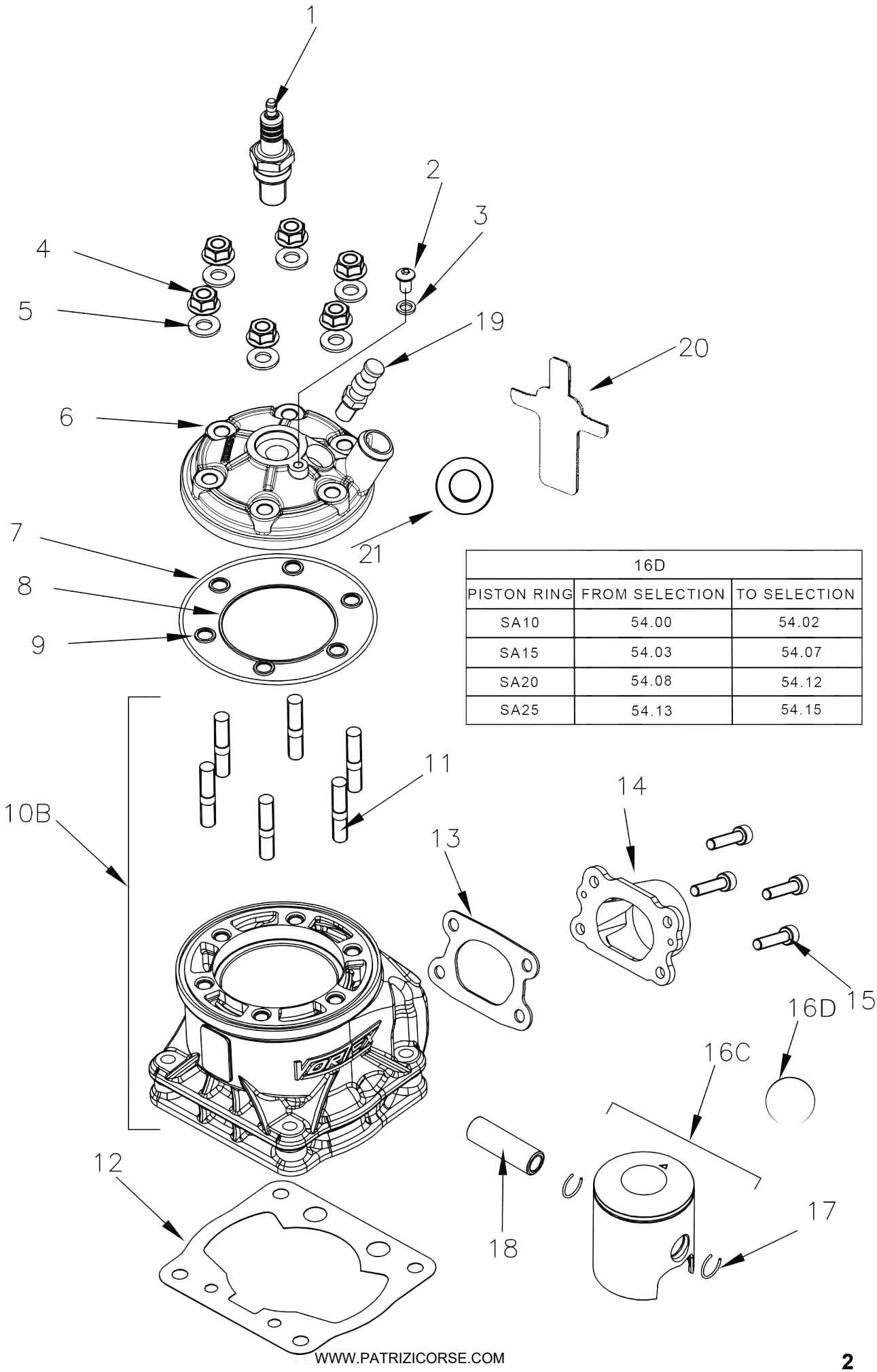

16D		
PISTON RING	FROM SELECTION	TO SELECTION
SA10	54.00	54.02
SA15	54.03	54.07
SA20	54.08	54.12
SA25	54.13	54.15

POSITION	PART NUMBER	DESCRIPTION	NUMBER
1	W003	Spark plug ngk b10 eg	1
2	W511/10	Roundhead screw m6 x 10	2
3	W10662	Copper gasket 6 x 10 x 1.5	2
4	W530/10FL	Nut m8 x 10	6
4	W012/DVS	Head sealing nuts	2
5	W560/17	Washer m8.2 x 17 x 1.5	6
6	W10010/DVSJ	Engine head DVS Junior	1
7	W629	O-ring cylinder/head 3400	1
8	W620	O-ring head 2237 viton	1
9	W627	O-ring stud bolt or 2031	1
10B	W10021/KF3C	Complete cylinder engine RAD KF3	1
11	W10043/RVZ	Cylinder head studbolt m8 x 56	1
12	W10104/KF2	Cylinder basis gasket 0.2	1
12	W10104/KF3	Cylinder basis gasket 0.3	1
12	W10104/KF4	Cylinder basis gasket 0.4	1
12	W10104/KF5	Cylinder basis gasket 0.5	1
13	W670/RKF	Exhaust gasket engine kf	1
14	W10930/RKF2	Exhaust manifold RKF2-DVS	1
15	VTCE6X16	Socket-head screw m6 x 16	4
16C	W10140/RKF	Complete piston RKF 54.00	1
16C	W10143/RKF	Complete piston RKF 54.03	1
16C	W10146/RKF	Complete piston RKF 54.06	1
16C	W10149/RKF	Complete piston RKF 54.09	1
16C	W10152/RKF	Complete piston RKF 54.12	1
16C	W10155/RKF	Complete piston RKF 54.15	1
16D	W260/SA10	‘L’ Piston ring 54.10x1.5	1
16D	W260/SA15	‘L’ Piston ring 54.15x1.5	1
16D	W260/SA20	‘L’ Piston ring 54.20x1.5	1
16D	W260/SA25	‘L’ Piston ring 54.25x1.5	1
17	W10081	Piston pin circlip	1
18	W10082	Piston pin d.15	1
19	W10012/DVS	Decompression valve	1
20	WA063/DVS	Head control template DVS	1
21	W630/005KF	Brass head GKT 0.05mm	1
21	W630/10KF	Copper head GKT 0.10mm	1

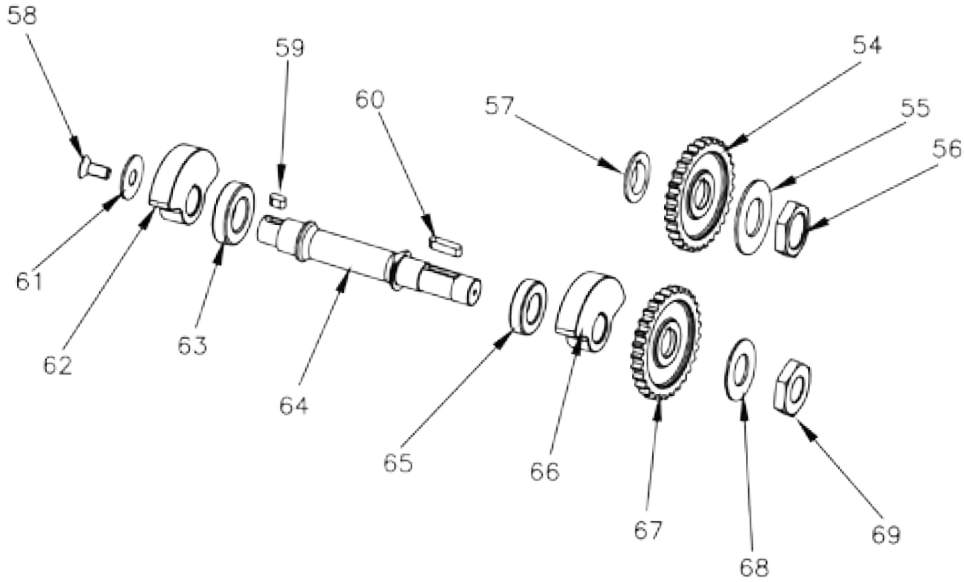
58
59
60
57
54
55
56
61
62
63
64
65
66
67
68
69

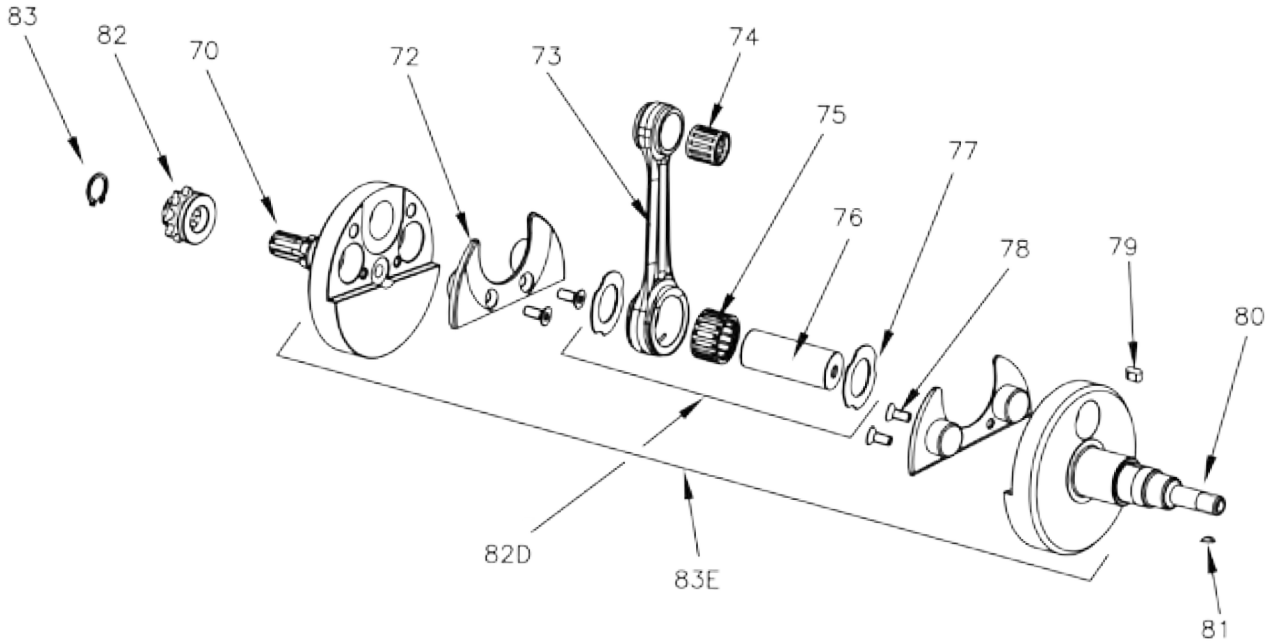
83
82
70
72
73
74
75
77
76
78
79
80
82D
83E
81

POSITION	PART NUMBER	DESCRIPTION	NUMBER
54	W2004/KF	Balancer shaft gear on shaft	1
55	W1767/1ROK	Belleville washer 20.4 x 40 x 1.5	1
56	W1765/KF	Nut m20 x 1 th. 5	1
57	W2000/DVS	Water pump spacer DVS	1
58	W502/16T	Flathead screw m8 x 16 turned	1
59	W124	Key 4 x 4 x 10	1
60	W126	Key 4 x 4 x 20	1
61	W2016/KF	Counterweight washer balancer shaft	1
62	W2014/KF	Counterweight drive side balancer shaft	1
63	W302/KF	Insert	1
64	W2012/KF	Shaft balancer shaft	1
65	W301/ROK	Insert 6302 tn9 c4	1
66	W2013/KF	Counterweight balancer shaft ignition side	1
67	W2003/KF	Balancer shaft gear on balancer shaft	1
68	W1764/KF	Washer 14.3 x 23.7 x 0.4	1
69	W1768/KF	Balancer shaft nut m14 x 1 left	1
70	W150/DVS	Drive shaft nut m14 x 1 left	1
72	W160/KF	Crankshaft stuffer	1
73	W230/KF2	Bare conrod engine	1
74	W10085/B4	Small end needle cage 15 x 19 x 20 b4	1
74	W10085	Small end needle cage 15 x 19 x 20 b2	1
75	W10320/B6	Silver plated cage iko 20 x 26 x 15 b6	1
75	W10320/B4	Silver plated cage iko 20 x 26 x 15 b4	1
75	W10320	Silver plated cage iko 20 x 26 x 15 b2	1
76	W200/KF	Crankshaft crankpin	1
77	W10310/KF	Silver plated shim d. 20.1	1
78	W522/12	Flathead screw m5 x 12	4
79	W124	Key 4 x 4 x 10	1
80	W140/KF	Magneto side half crankshaft DVS	1
81	W121	Dragging sprocket key 3 x 3.7 x 10	1
82	W690/3VLR11	Sprocket 11T	1
82	W690/3VLR12	Sprocket 12T	1
83	W693/VLR	Sprocket seeger	1
83D	W190/KF2	Complete conrod	1
83E	W130/DDJ	Complete crankshaft DVS	1

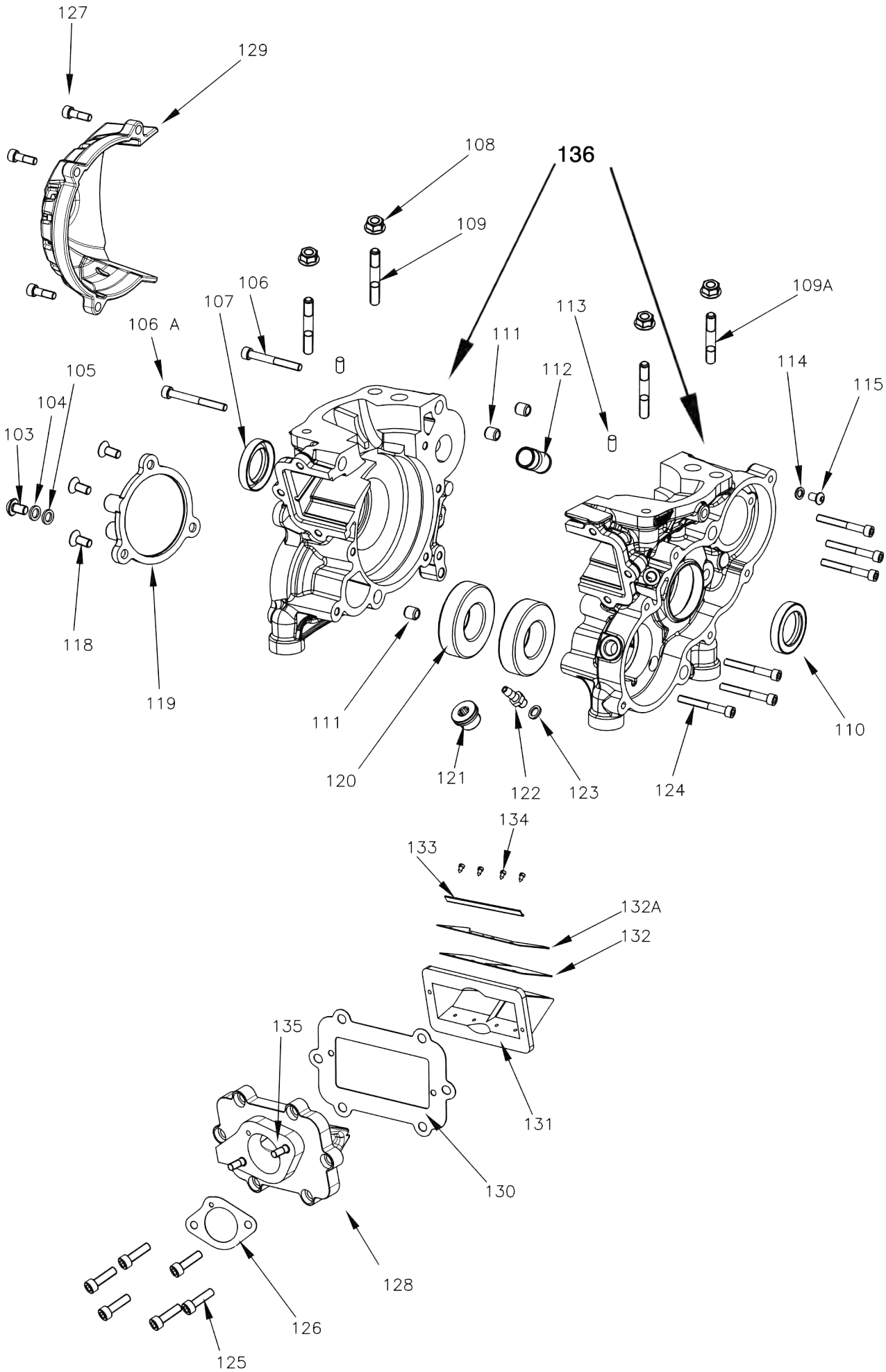
127
129
108
136
109
106
107
106 A
105
104
103
118
119
111
120
121
122
123
124
110
113
112
111
109A
114
115
134
133
132A
132
135
131
130
128
126
125

POSITION	PART NUMBER	DESCRIPTION	NUMBER
103	W511/10	Roundhead screw m6 x 10	1
104	W570/12	Head washer 6 x 12 x 1.5	1
105	W10662	Copper gasket d.6 x 10 x 1.5	1
106	V.TCE6X40	Socket-head screw m6 x 40	4
106A	V.TCE6X45	Socket-head screw m6 x 45	3
107	W310	Oil seal fpj 20 x 35 x 7 double lip	1
108	W530/10FL	Nut m8 x 10	4
109	W10042/1	Cylinder studbolt m8 x 55	1
109A	W10042/KF	Cylinder studbolt m8 x 49	1
110	W10552	Sprocket seal 25 x 40 x 7	1
111	W075/1	Crankcase dowel 10 x 10.5 x 6.5	1
112	W015	Water head pipe fitting	1
113	W1766/1ROK	Cylindrical pin 6 x 12	1
114	W10662	Copper gasket 6 x 10 x 1.5	1
115	W511/10	Roundhead screw m6 x 10	1
118	W524/14	Flathead screw m5 x 14	3
119	W2017/KF	Balancer shaft cover	1
120	W300/A4	Insert crankcase 6205 c4	1
121	W10267	Complete oil plug tcem1m 12 x 1.5	1
122	W800	Depression pipe fitting m8 hex	1
123	W10267	Copper gasket d.8 x 12 x 1	1
124	V.TCE6X50	Socket-head screw m6 x 50	3
125	V.TCE6X16	Socket-head screw m6 x 16	6
126	W660/RVA	Carburetor gasket d.24 – 1mm	1
127	V.TCE6X16	Socket-head screw m6 x 16	3
128	W350/DVS	Reed valve pyramid conveyor DVS	1
129	W740/MR	Clutch guard cover	4
130	W351/RKF	Conveyor / reed valve pyramid gasket	1
131	W362/DVSJ	Reed valve pyramid DVS Junior	1
132	W393/1KF30	Carbon petal thickness 0.30 DVS	1
132A	W399/KF	Carbon Flow deviat.9/12 KF	1
133	W389	Enlarged pyramid long plate	1
134	W380	Reeds fixing screws m3 x 5	4
135	W480/3	Reed v.pyramid/carb.studbolt 6 x 32	1
135	W480/1	Reed v.pyramid/carb.studbolt 6 x 28	1
136	W050/DVS	Crankcase Set DVS #AU	1

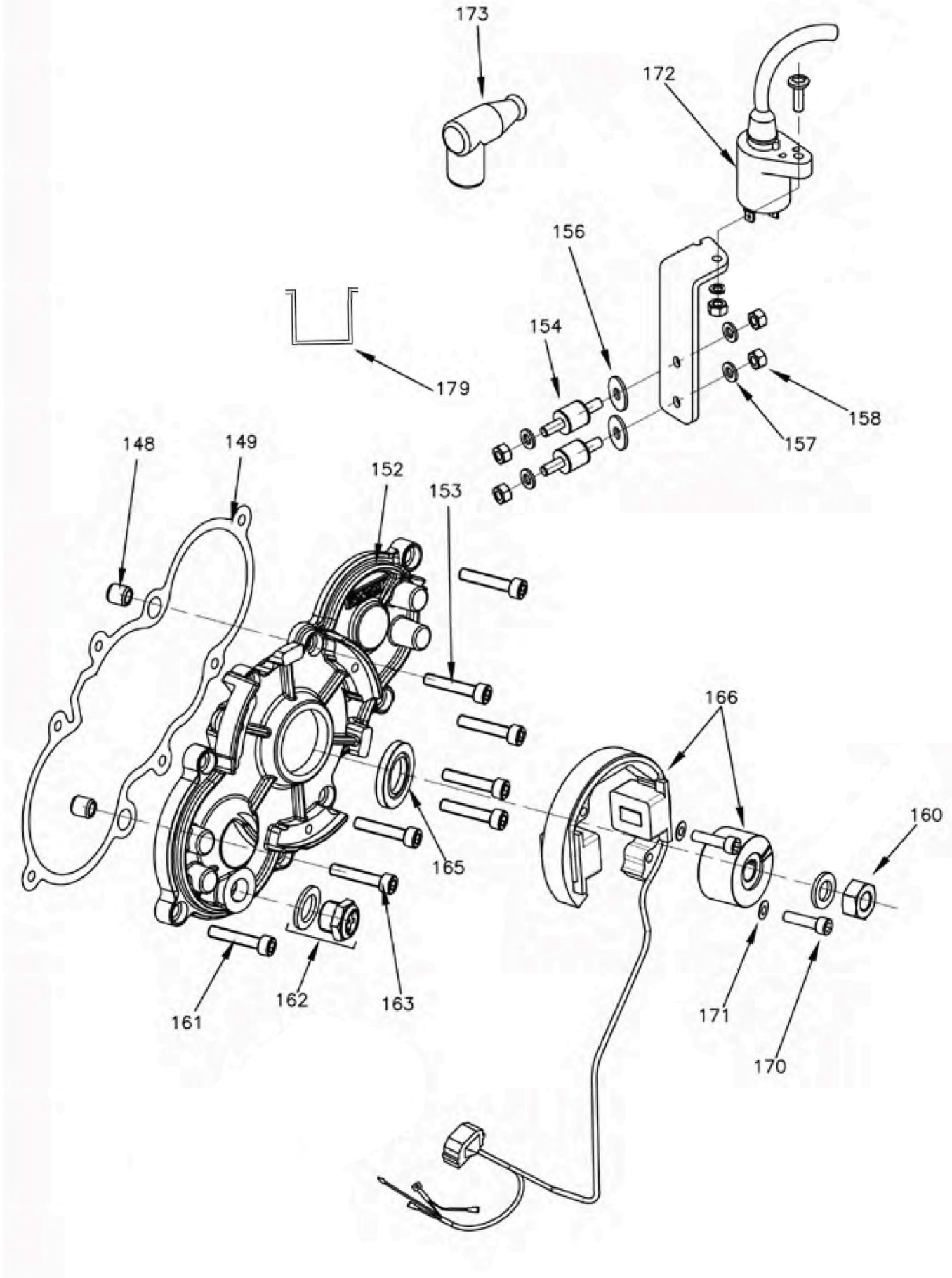
173
172
156
154
179
158
157
148
149
152
153
166
160
165
161
162
163
171
170

POSITION	PART NUMBER	DESCRIPTION	NUMBER
148	W075/1	Crankcase dowel 10 x 10.5 x 6.5	1
149	W066/KF	Gears cover gasket	1
152	W065/DDSP	Complete gears cover DVS	1
153	V.TCE6X25	Socket-head screws m6 x 25	6
154	W440	Coil fixing silent-block	1
156	R.P.6X18	Flat washer 6 x 18 x 1.5	2
157	R.P.6X12	Flat washer 6 x 12 x 1.5	4
158	W531/06	Hexagonal nut m6 x 1	4
160	W695/1ROK	Hexagonal nut m12x1	1
161	V.TCE6X20	Socket-head screw m6 x 20	1
162	W2036/ROK	Oil level tla2-m16 x 1.5	1
163	V.TCE5X25	Socket-head screw m6 x 25	1
165	W320/1	Oil seal 17 x 28 x 7 double lip	1
166	W407/DDS	Bare ignition MR3-DVS	1
170	V.TCE5X18	Socket-head screw m5 x 18	3
171	W580/11	Washer 11 x 5.3 x 1	1
172	W408/DDJ	CDI / Coil Jnr blue	1
173	W420/2	Spark cap	1
179	W430	Earth Cable	1

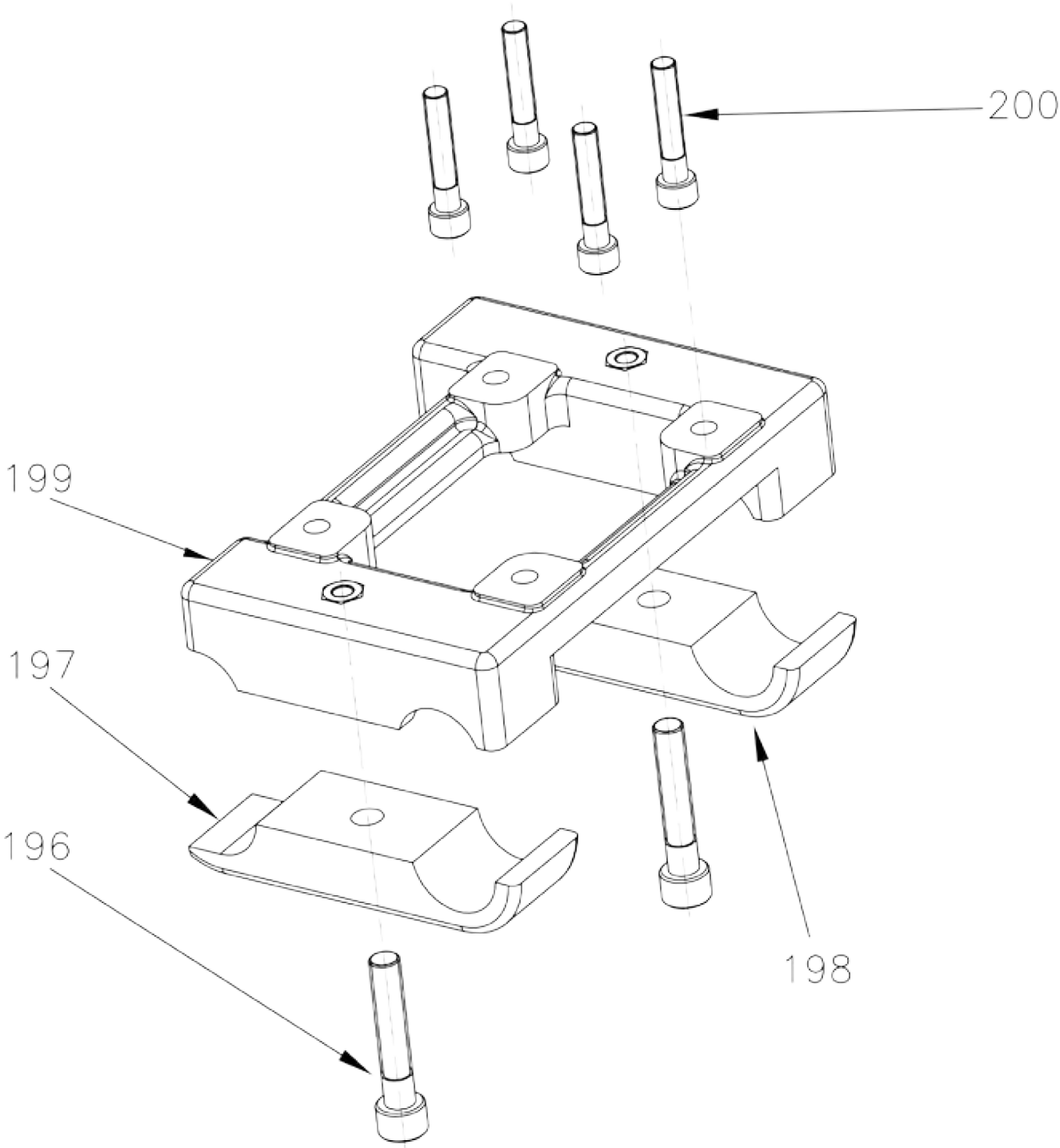
200
199
197
196
198

POSITION	PART NUMBER	DESCRIPTION	NUMBER
196	V.TCE10X40	Socket head screw 10 x 40	1
197	0039.A30A	AL rear engine mount bracket 1 screw 92x30mm	1
198	0039.A30	AL engine mount bracket 1 screw 92x30mm	1
199	0038.DOAF	Flat MG DVS engine mount 92x30mm	6
200	V.TCE8X35	Socket head screw 8 x 35	1

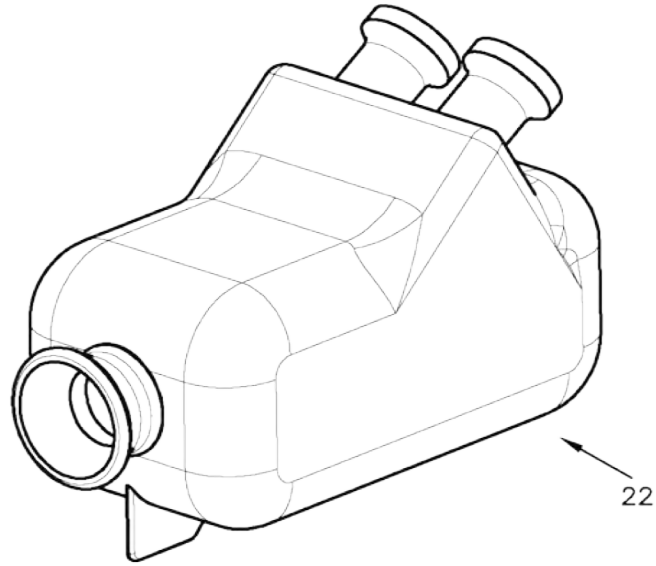

AIR FILTER

222

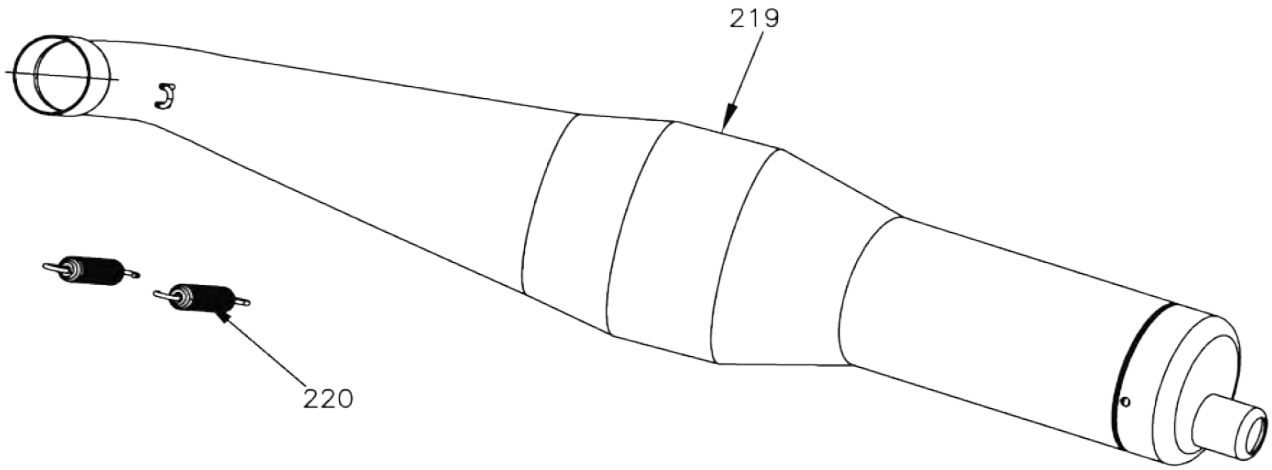

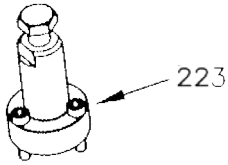

POSITION	PART NUMBER	DESCRIPTION	NUMBER
219	W10901/DVSJ	Exhaust pipe Jnr	1
220	W10925	Exhaust springs Jnr	2
221	0225.GLB29	Air box	1
222	WDVS/1AF	Air filter DVS	1
223	WA071	Ignition Puller PVL	1

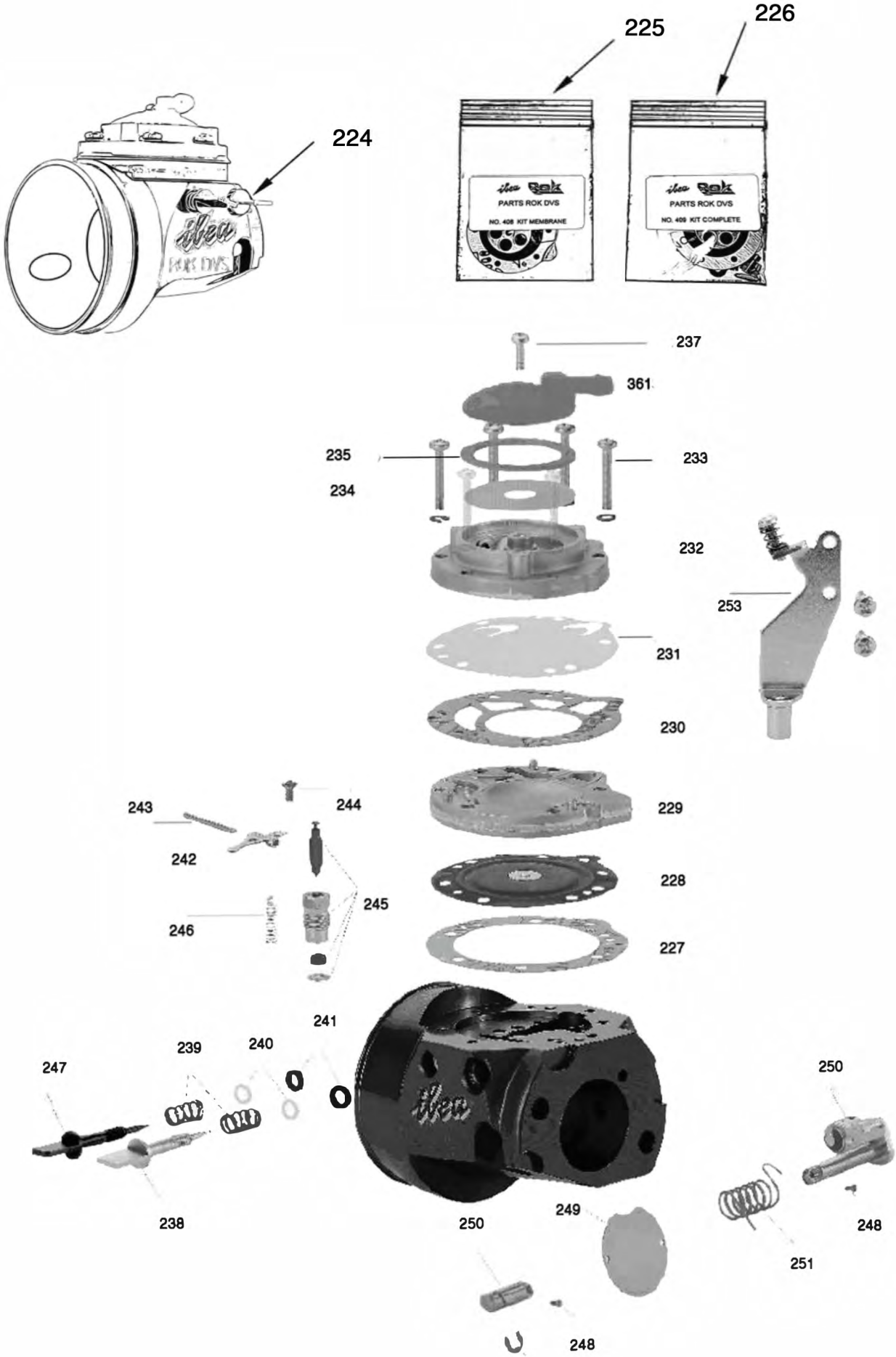
225
226
224
PARTS ROK DVS
NO. 408 KIT MEMBRANE
PARTS ROK DVS
NO. 409 KIT COMPLETE
237
361
235
233
234
232
253
231
230
229
243
244
242
228
245
246
227
241
239
240
247
250
238
250
249
248
251
248
252

POSITION	PART NUMBER	DESCRIPTION	NUMBER
224	W810/DVS	IBEA carburetor d. 24	1
225	W810/408DVS	Gasket kit DVS	1
226	W810/409DVS	Kit complete DVS	1
227	W810/351	Lower body gasket	1
228	W810/352	Black bottom membrane	1
229	W810/353	Diaphragm cover	1
230	W810/355	Top body gasket	1
231	W810/356	Top membrane (clear)	1
232	W810/357	Top body of carby	1
233	W810/358	Screw for pump body	1
234	W810/359	Fuel entry filter	1
235	W810/360	Fuel entry cover gasket	1
236	W810/361	Fuel entry plastic cover (YEL)	1
237	W810/362	Centre fixing screw	1
238	W810/363	Idle mixture screw (low speed)	1
239	W810/364	Idle mixture screw springs	1
240	W810/365	Plastic washer	1
241	W810/366	O’ring square cut	1
242	W810/369	Fulcrum lever	1
243	W810/370	Fulcrum pivot pin	1
244	W810/371	Screw for pivot pin	1
245	W810/372	Needle valve and seat	1
246	W810/373	Inlet tension spring	1
247	W810/374	Idle mixture screw (high speed)	1
248	W810/400	Butterfly fixing screw	1
249	W810/401	Butterfly valve 27mm	1
250	W810/4021	Butterfly drive shaft complete	1
251	W810/403	Butterfly return spring	1
252	W810/404	Butterfly shaft fixing circlip	1
253	W810/406	ACCL cable holder	1
254	W810/407	Fixing high set nut	1

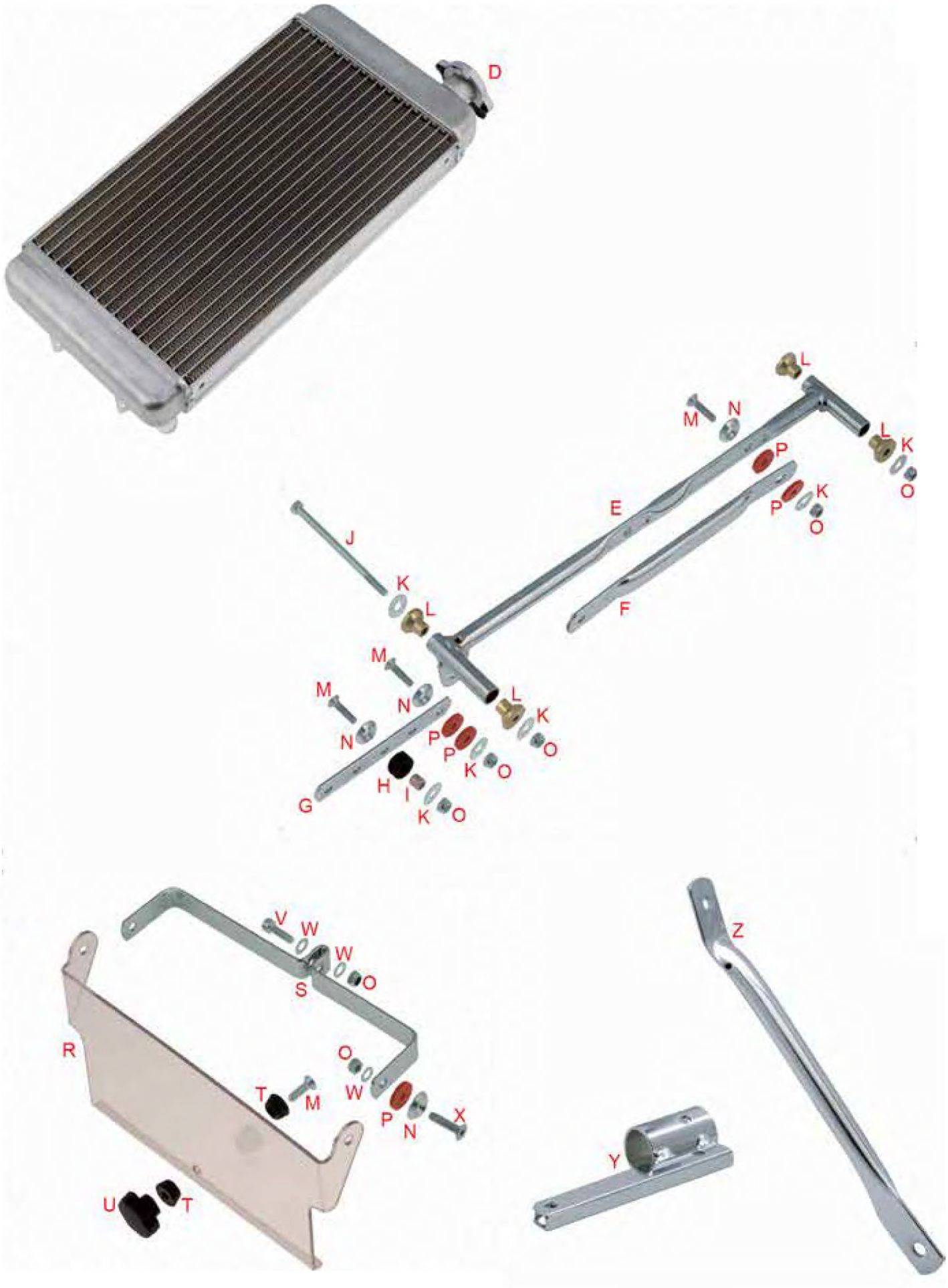
D
L
M
N
L
K
P
O
E
P
K
O
J
K
L
F
M
M
N
L
K
N
P
O
P
K
O
H
I
G
K
O
V
W
W
S
O
Z
R
O
T
M
W
P
N
X
Y
U
T

POSITION	PART NUMBER	DESCRIPTION	NUMBER
A	0093.TB	OTK radiator 400x200mm complete with supports	1
B	0094.TA	Support for OTK radiator 400x200mm	1
D	0093.T3	Radiator plug	6
E	0094.R0	Support for radiator 400x200mm	1
F	0094.S0	Support prop for radiator 400x200mm	2
G	0094.PA	Support plate for radiator	4
H	0093.02	Radiator anti-vibration rubber	4
I	0093.04	Brush for radiator rubber	1
J	V.TCE6X100	TE screw 6x100	1
K	R.P.6X18	Washer d.6x18x1mm	1
L	0093.T5	Bush for radiator support	1
M	V.TPCSEI6X25	TPSCEI screw 6 x 25	1
N	0033.00	Biconical AL washer d=6mm	1
O	D.M6A.B	A.B nit M6	1
P	0031.00	Rubber d=6x20mm	1
Q	0094.Z0	Complete air bulkhead kit for radiator 400x200mm	1
R	0094.Z1	Radiator bulkhead in plexiglas	1
S	0094.Z2	Support for radiator bulkhead	1
T	0094.Z3	Radiator buffer	1
U	0119.05	Knob for radiator bulkehead	1
V	V.TCE6X20	TCE screw 6x20	1
W	R.P.6X12	Washer d.6.3x12.5x1mm	1
X	V.TPSCEI6X20	TPSCEI screw 6x20	1
Y	0094.F0	DD2 lower radiator	1
Z	0094.F1	DD2 stiffener for DD2 radiator support	


T
A


B
U

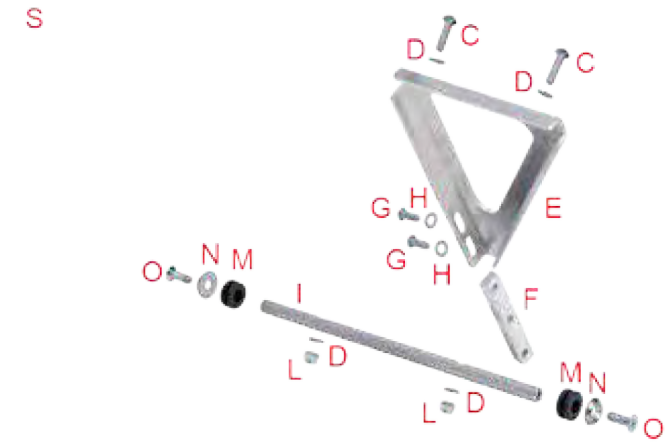
S
D C
D C
G H
E
G H
O N M
I
F
L D
M N
L D
O

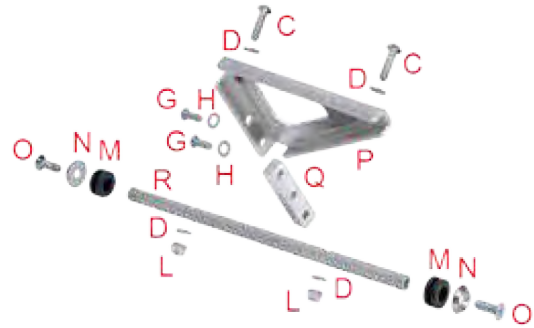
D C
D C
G H
O N M
G H
P
R
Q
D
L
M N
L D
O

POSITION	PART NUMBER	DESCRIPTION	NUMBER
A	0093.EOKIT	Radiator kit OTK 470x265x43 complete with supports (Air choke kit optional)	1
B	0094.ZB	Air choke kit	1
C	V.TB5X20	TB screw 6x16	4
D	R.P.5X11	Washer d=5x11x1 mm	8
E	0094.E1	Upper support for radiator OTK 470x265x43	1
F	0094.E1B	Upper radiator support bar OTK 470x265x43	1
G	V.TB6X16	TB screw 6x16	4
H	R.P6X12	Washer d=6.3x12.5x1mm	4
I	0094.E1A	Upper radiator support rod OTK 470x265x43	1
L	D.M5AB	A.B. nut M5	4
M	0093.02	Anti-vibration rubber	1
N	0033.00	Biconical AL washer d=6mm	1
O	V.TPSCEI6X20	TPSCEI screw 6x20	4
P	0094.E2	Lower support kit for radiator OTK 470x265x43	1
Q	094.E2B	Lower radiator support bar OTK 470x265x43	1
R	0094.E2A	Lower radiator support bar OTK 470x265x43	1
S	0094.EOKIT	Support kit for radiator OTK 470x265x43	1
T	0093.C3	Radiator plug with hole	1
U	0094.ZB8	Sliding belt	1

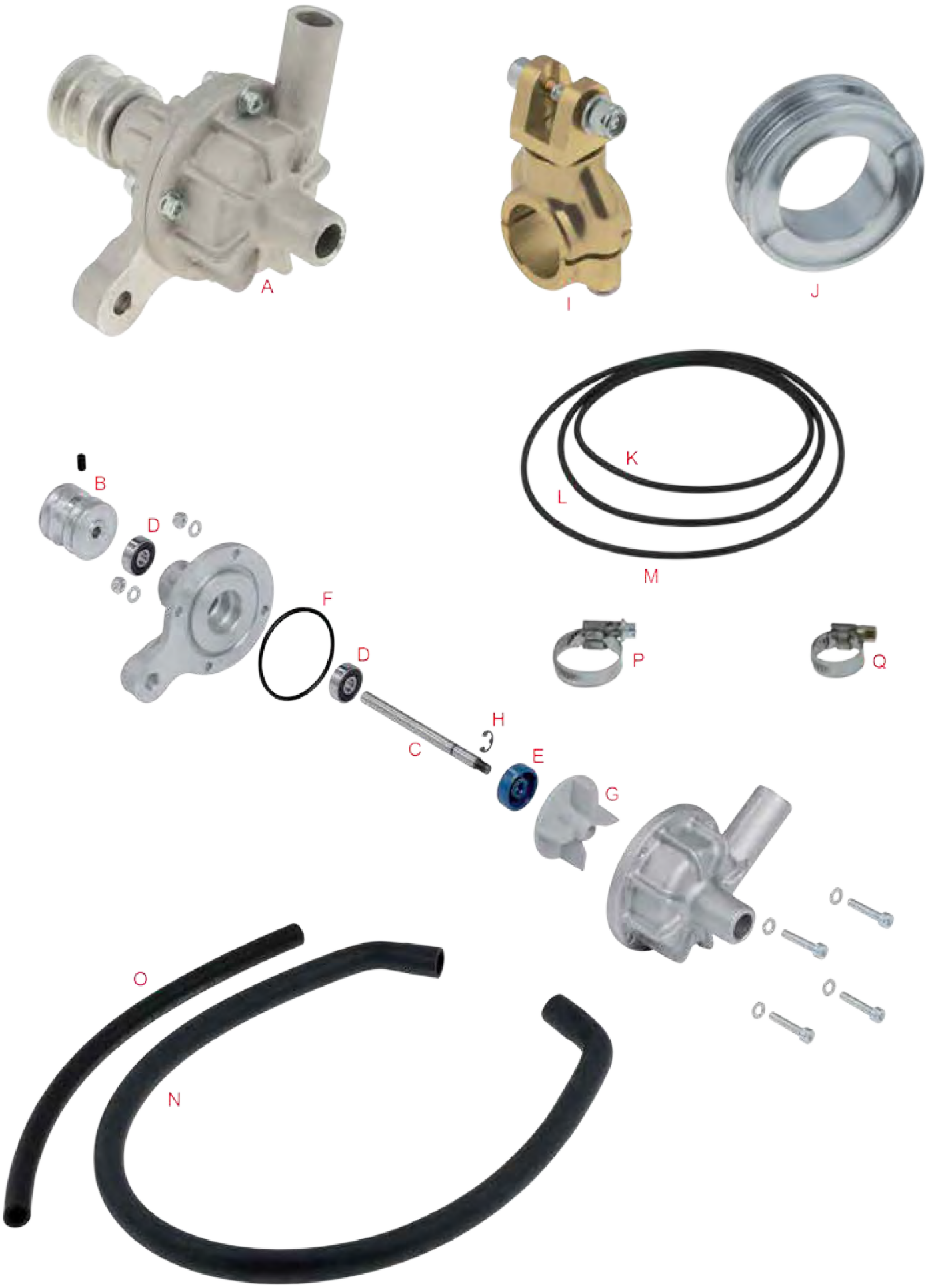
A
I
J
K
L
M
B
D
F
D
P
Q
H
C
E
G
O
N

POSITION	PART NUMBER	DESCRIPTION	NUMBER
A	0097.00	Water pump	1
B	0097.02	Water pump pulley	1
C	0097.03	Water pump crankshaft	1
D	0097.04	Water pump bearing	1
E	0097.05	Water pump oil seal	1
F	0097.06	Water pump OR	1
G	0097.07	Water pump impeller	1
H	0097.08	Seeger for water pump shaft	1
I	0259.E28KIT	Complete water pump clamp d=28mm	1
I	0259.E30KIT	Complete water pump clamp d=30mm	1
I	0259.E32KIT	Complete water pump clam d=32mm	1
J	0098.B0	Water pump pulley d=50mm	1
K	0096.C0	Water pump belt d=92mm	1
L	0096.00	Water pump belt d=110mm	1
M	0096.B0	Water pump belt d=133mm	1
N	0095.00	Water pipe L800mm	1
O	0095.A0	Water pipe d=12x17mm	1
P	0091.00	Water pump AC clamp d=16x25mm	1
Q	0091.A0	Water pump AC clamp d=12x20mm	1

6. CONTACTS

MANUFACTURER

Vortex Factory
Via E. Fermi 5
27040 – Campospinoso
Italy
Phone no.: +39 0385 765200
support@vortex-engines.com

Australian Importer

Patrizicorse
Lot 1 John Lund Dr
Hope Island, QLD, 4212
Phone: +61 7 5530 1583
info@patrizicorse.com
www.patrizicorse.com

AKA Australian Karting Association

12 Macquarie Avenue
PENRITH NSW 2750
Phone: +61 (0)2 4721 1300
Fax: +61 (0)2 4721 1522
Postal Address
PO Box 272 Penrith BC
Penrith NSW 2751